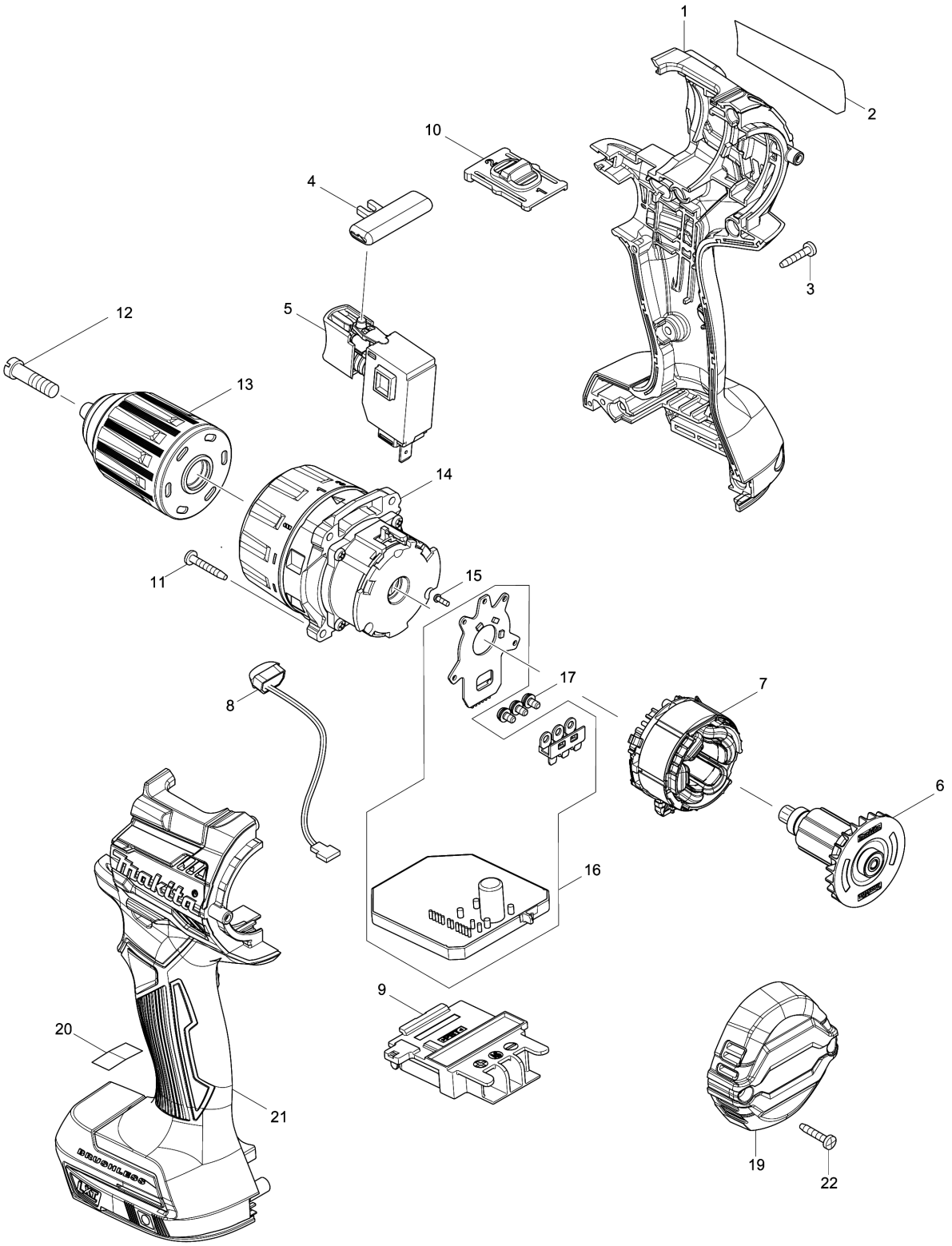DDF484