3 600 HA6 008

Stand } ~~21-01-27~~
Issue } 21-02-08

Fig./Abb. 1

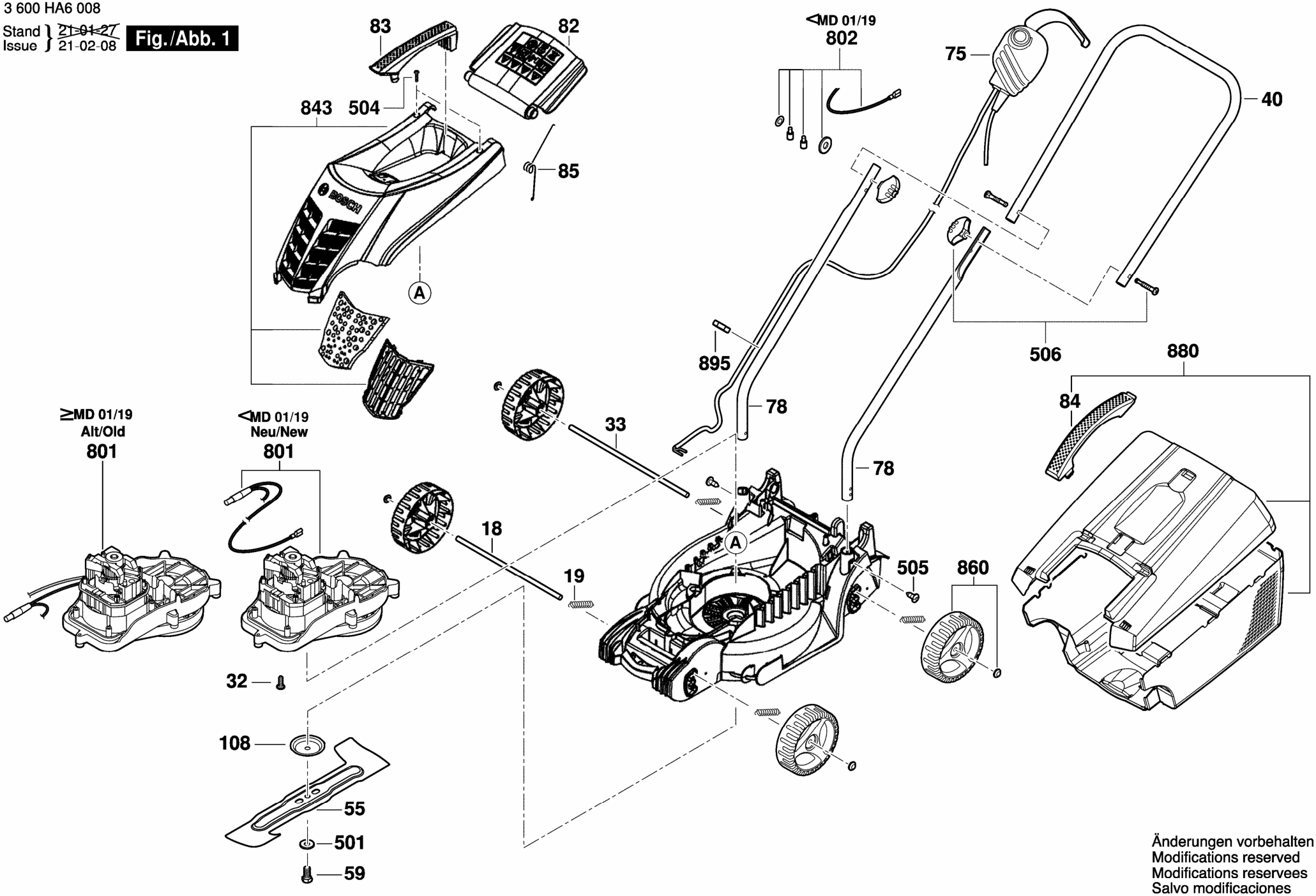

Änderungen vorbehalten
Modifications reserved
Modifications reservees
Salvo modificaciones